MIDI, MEGA and ANL fuses, and fuse holders

www.victronenergy.com

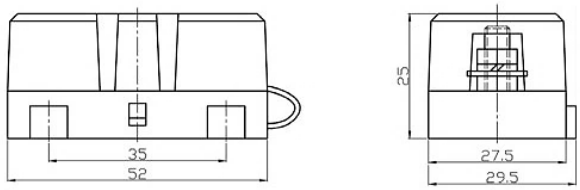

Fuse holder for MIDI fuse

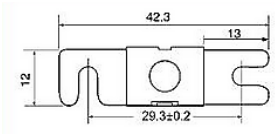

MIDI fuse

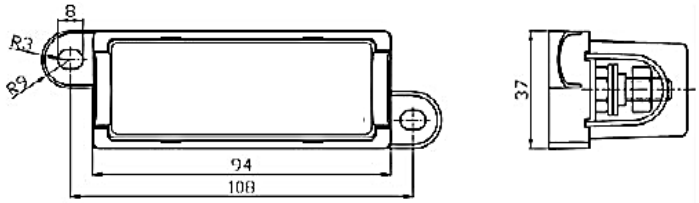

Fuse holder for MEGA fuse

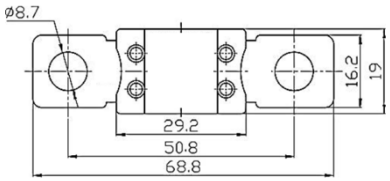

MEGA fuse

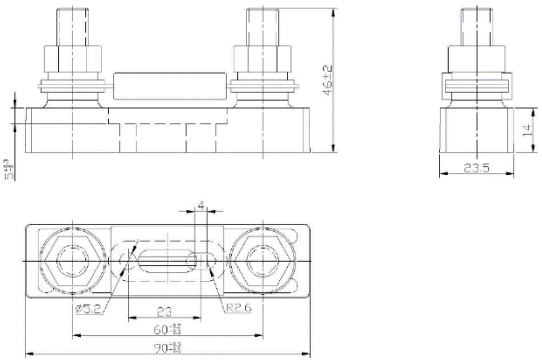

Fuse holder for ANL fuse

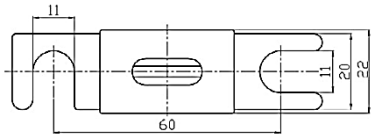

ANL fuse

MIDI fuses 32V	Appr. voltage drop	Cold resistance
MIDI fuse 60A/32V	70 mV	0,9 mΩ
MIDI fuse 80A/32V	60 mV	0,55 mΩ
MIDI fuse 100A/32V	60 mV	0,45 mΩ
MIDI fuse 125A/32V	60 mV	0,30 mΩ
MIDI fuse 150A/32V	80 mV	0,30 mΩ
MIDI -fuse 200A/32V	80 mV	0,25 mΩ
MIDI fuses 58V	**Appr. voltage drop**	**Cold resistance**
MIDI fuse 30A/58V	65 mV	2 mΩ
MIDI fuse 40A/58V	65 mV	1,4 mΩ
MIDI fuse 50A/58V	65 mV	1 mΩ
MIDI fuse 60A/58V	70 mV	0,9 mΩ
MIDI fuse 80A/58V	70 mV	0,42 mΩ
MIDI fuse 100A/58V	70 mV	0,45 mΩ

MEGA fuses 32V	Appr. voltage drop	Cold resistance
MEGA fuse 60A/32V	120 mV	1,5 mΩ
MEGA fuse 80A/32V	90 mV	0,7 mΩ
MEGA fuse 100A/32V	90 mV	0,6 mΩ
MEGA fuse 125A/32V	90 mV	0,4 mΩ
MEGA fuse 150A/32V	90 mV	0,38 mΩ
MEGA fuse 175A/32V	90 mV	0,3 mΩ
MEGA fuse 200A/32V	80 mV	0,25 mΩ
MEGA fuse 225A/32V	80 mV	0,22 mΩ
MEGA fuse 250A/32V	80 mV	0,2 mΩ
MEGA fuse 300A/32V	80 mV	0,17 mΩ
MEGA fuse 400A/32V	70 mV	0,13 mΩ
MEGA fuse 500A/32V	70 mV	0,1 mΩ
MEGA fuses 58V	**Appr. voltage drop**	**Cold resistance**
MEGA fuse 125A/58V	90 mV	0,4 mΩ
MEGA fuse 200A/58V	80 mV	0,25 mΩ
MEGA fuse 250A/58V	80 mV	0,2 mΩ
MEGA fuse 300A/58V	80 mV	0,17 mΩ
MEGA fuses 80V	**Appr. voltage drop**	**Cold resistance**
MEGA fuse 40A/80V	135 mV	1,459 mΩ
MEGA fuse 60A/80V	135 mV	1,017 mΩ
MEGA fuse 80A/80V	110 mV	0,716 mΩ
MEGA fuse 100A/80V	110 mV	0,868 mΩ
MEGA fuse 125A/80V	110 mV	0,653 mΩ
MEGA fuse 150A/80V	110 mV	0,332 mΩ
MEGA fuse 175A/80V	110 mV	0,282 mΩ
MEGA fuse 200A/80V	110 mV	0,253 mΩ
MEGA fuse 225A/80V	110 mV	0,235 mΩ
MEGA fuse 250A/80V	110 mV	0,208 mΩ
MEGA fuse 300A/80V	80 mV	0,171 mΩ
MEGA fuse 400A/80V	80 mV	0,128 mΩ
MEGA fuse 500A/80V	80 mV	0,106 mΩ

ANL fuses 80V	Appr. voltage drop	Cold resistance
ANL fuse 300A/80V	125 mV	0,18 mΩ
ANL fuse 400A/80V	125 mV	0,16 mΩ
ANL fuse 500A/80V	100 mV	0,25 mΩ

Victron Energy B.V. | De Paal 35 | 1351 JG Almere | The Netherlands
E-mail: sales@victronenergy.com
www.victronenergy.com