SBR064/096/128/160/192/224/256

High Voltage LFP Battery

HIGH-PERFORMANCE

- Up to 30 A continuous charging and discharging current with high efficiency
- Up to 100% usable energy

SAFETY

- Lithium iron phosphate Battery
- Multi-stages protection design and extensive safety certification

FLEXIBILITY

- Extendable during lifetime
- Support 2-8 modules per unit, 6.4–25.6 kWh capacity range

EASY INSTALLATION

- Compact and Light, single person installation
- Plug and Play, no cables needed between battery modules

© 2024 Sungrow Power Supply Co., Ltd. All rights reserved. Subject to change without notice. Version 5

SUNGROW
Clean power for all

Type designation	SBR064 *	SBR096	SBR128	SBR160	SBR192	SBR224	SBR256
Technical properties	2 modules	3 modules	4 modules	5 modules	6 modules	7 modules	8 modules
System data							
Battery type	LiFePO4 Prismatic Cell						
Battery module	3.2 kWh, 33 kg						
Energy (useable) **	6.4 kWh	9.6 kWh	12.8 kWh	16 kWh	19.2 kWh	22.4 kWh	25.6 kWh
Nominal voltage	128 V	192 V	256 V	320 V	384 V	448 V	512 V
Operating voltage	108 V – 146 V	162 V – 219 V	216 V – 292 V	270 V – 365 V	324 V – 438 V	378 V – 511 V	432 V – 584 V
Max. charging/discharging current: continuous ***	30 A						
Depth of discharge	Max. 100 % DOD (settable)						
Short circuit current	3500 A						
Display	SOC indicator, Status indicator						
Communication interface	CAN						
Protection							
Over/under voltage protection	Yes						
Over current protection	Yes						
Over/under temperature protection	Yes						
DC breaker	Yes						
General data							
Dimensions (W*H*D)	625*545*330 mm	625*545*330 mm	625*675*330 mm	625*805*330 mm	625*935*330 mm	625*1065*330 mm	625*1195*330 mm
Weight	89 kg	114 kg	147 kg	180 kg	213 kg	246 kg	279 kg
Installation location	Indoor / Outdoor						
Mounting method	Floor stand						
Operating ambient temperature range	Charge: 0 ℃ - 50 ℃ Discharge: -20 ℃ - 50 ℃						
Degree of protection	IP55						
Allowable relative humidity range	0% - 95% non - condensing						
Max. operating altitude	Max. 4000 m						
Cooling method	Natural convection						
Certificates	CE, CEC, IEC 62619, IEC 62040, UN38.3, VDE 2510-50, IEC 62477, IEC 63056, IEC 61000, UKCA						

* SBR064 consists of 2 battery modules and 1 empty module.
** Test conditions: 25 °C, 100 % depth of discharge (DOD), 0.2C charge & discharge.
*** The maximum charging/discharging current of SBR064 is 20A when used with SHRT series inverter.

© 2024 Sungrow Power Supply Co., Ltd. All rights reserved. Subject to change without notice. Version 5

2 Product Description

2.1 Product Introduction

Brief Introduction

The battery is designed for residential energy storage systems. The inbuilt battery management system monitors its operation and prevents the battery from operating beyond the specified limitations.

This product is a high-voltage battery system with an operating voltage range between 108 V ~ 584 V. A battery system consist of 2 to 8 individual battery modules connected in series.

Max.4 battery systems can be connected in parallel to compatible hybrid inverter. Please refer to hybrid inverter manual for the compatibility details.

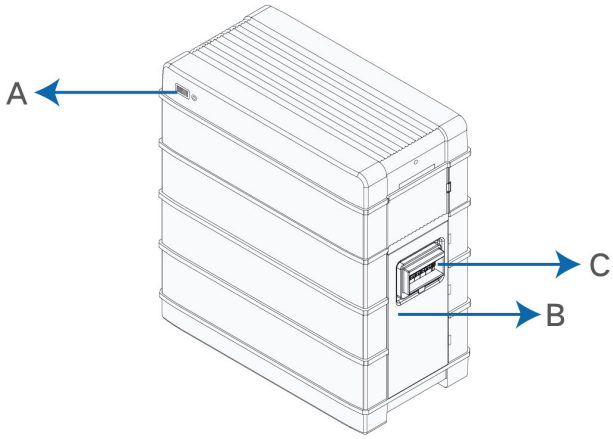

figure 2-1 Product overview

NOTICE

SBR064 is only applicable to SH3.0-6.0RS and SH5.0-10RT/-20.

Images are for reference only. The actual products received may differ.

table 2-1 Design of the product

Position	Designation
A	LED Indicator LED indicator include the SOC indicator and the status indicator. The status indicator is also used as the power button. LED indicator indicates the SOC value and status of the battery system.
B	Nameplate The nameplate clearly indentifies the product. The nameplate must remain permanently attached to the product. You will find the following information on the nameplate: • SUNGROW logo and product model • Technical data • Product symbol
C	DC circuit breaker

Major Components

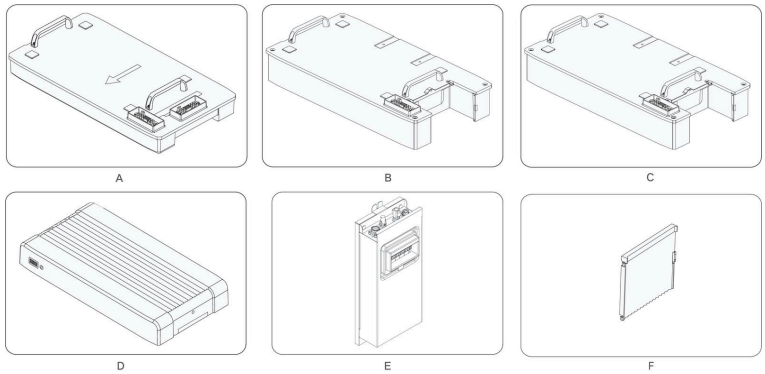

Images are for reference only. The actual products received may differ.

Name	Designation
A	Base
B	Battery module
C	Empty module
D	Top cover
E	Switch gear
F	Empty module*

NOTICE

Battery module: Single module is 3.2 kWh and used in SBR064-256 battery system.

***Empty module: 1. Decorative accessory, which makes the battery height higher, and on the SBR064, which makes the switch gear fit perfectly into the modules.**

2. It has the same appearance as Battery module, with a built-in conduction line and does not contain battery cells.

3. Standard on SBR064, optional on SBR096-256.

table 2-2 Configuration Table

No.	Model	Base	Battery module	Top cover	Switch gear	Side cover
1	SBR064	1	2	1	1	2
2	SBR096	1	3	1	1	3
3	SBR128	1	4	1	1	4
4	SBR160	1	5	1	1	5
5	SBR192	1	6	1	1	6
6	SBR224	1	7	1	1	7
7	SBR256	1	8	1	1	8

2.2 Terminal Description

All electrical terminals are located at the switch gear.

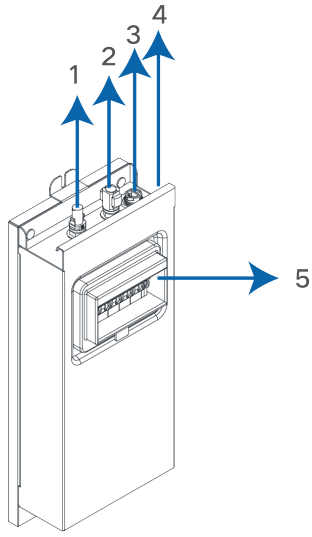

NOTICE

The battery can only be connected to hybrid inverter produced by SUNGROW, as listed below:

- **Three-phase model: SH5.0RT, SH6.0RT, SH8.0RT, SH10RT, SH15T, SH20T, SH25T.**
- **Single-phase model: SH3.0RS, SH3.6RS, SH4.0RS, SH5.0RS, SH6.0RS.**

Pay attention the hybrid inverter firmware version should be same that is illustrated in hybrid inverter manuals.

- - End